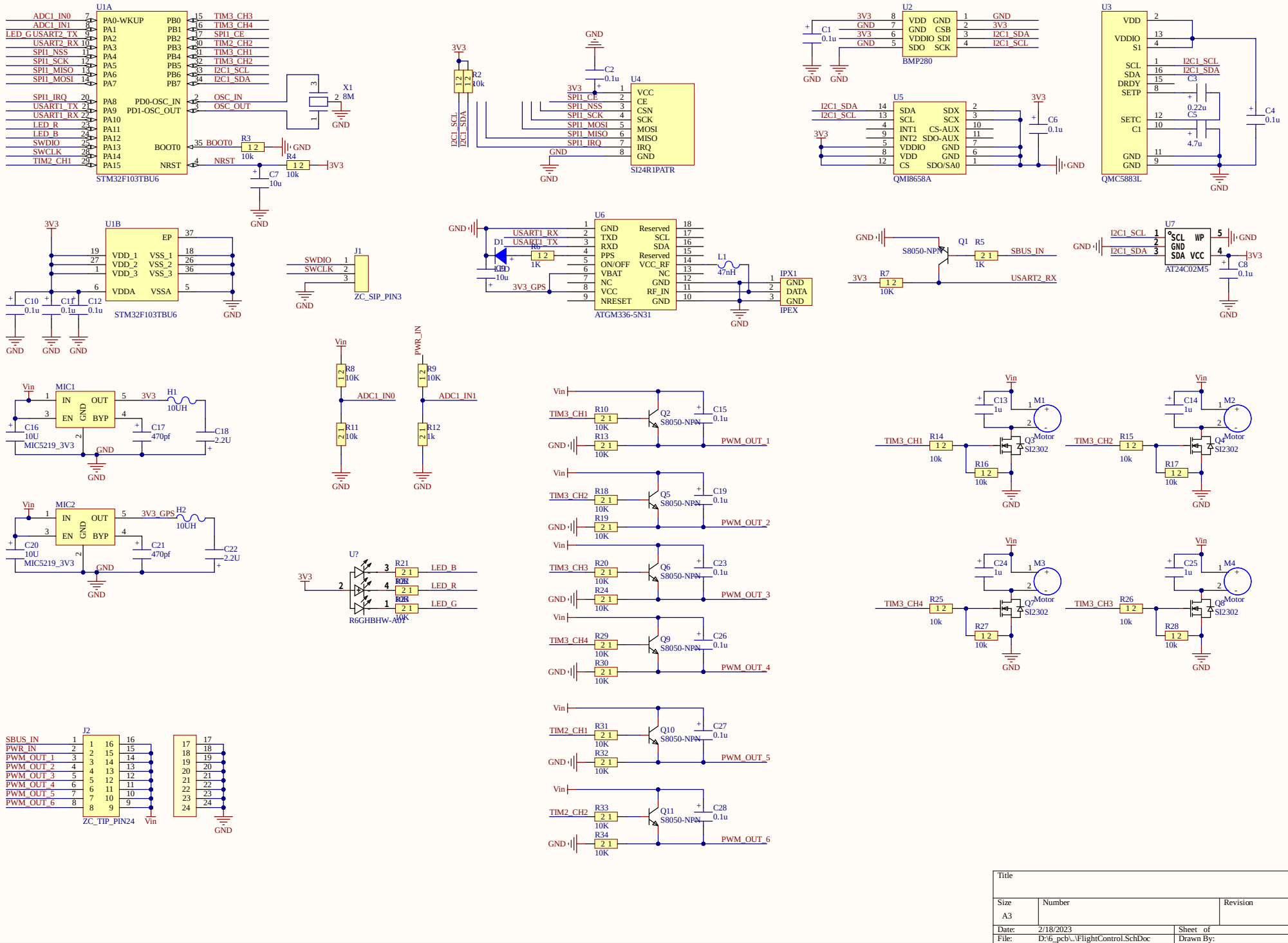
U1A
STM32F103TBU6
U1B
STM32F103TBU6
U2
BMP280
U3
QMC5883L
U4
SI24R1PATR
U5
QMI8658A
U6
ATGM336-5N31
U7
AT24C02M5
J1
ZC_SIP_PIN3
J2
ZC_TIP_PIN24
MIC1
MIC5219_3V3
MIC2
MIC5219_3V3
U?
R6GHBHW-A01
X1
8M
Q1
S8050-NPN
Q2
Q3
Q4
Q5
Q6
Q7
Q8
Q9
Q10
Q11
M1
M2
M3
M4
SI2302
Motor
IPX1
IPEX
L1
47nH
D1
LED
GND
3V3
Vin
PWR_IN
ADC1_IN0
ADC1_IN1
PWM_OUT_1
PWM_OUT_2
PWM_OUT_3
PWM_OUT_4
PWM_OUT_5
PWM_OUT_6
SBUS_IN
USART2_RX
USART1_RX
USART1_TX
LED_B
LED_R
LED_G
Title
Size
A3
Number
Revision
Date: 2/18/2023
Sheet of
File: D:\6_pcb\..\FlightControl.SchDoc
Drawn By:

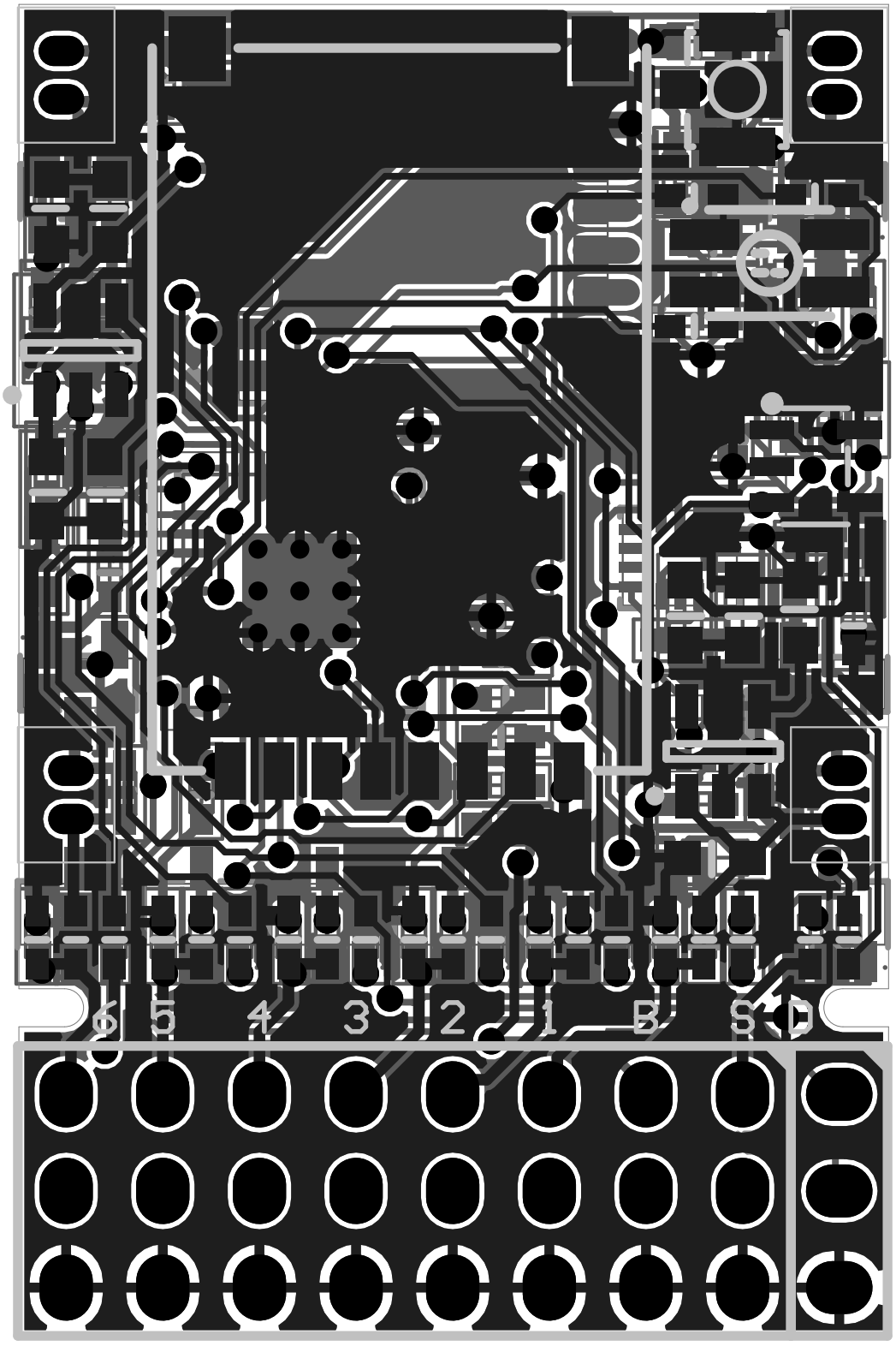
6
5
4
3
2
1
B
S

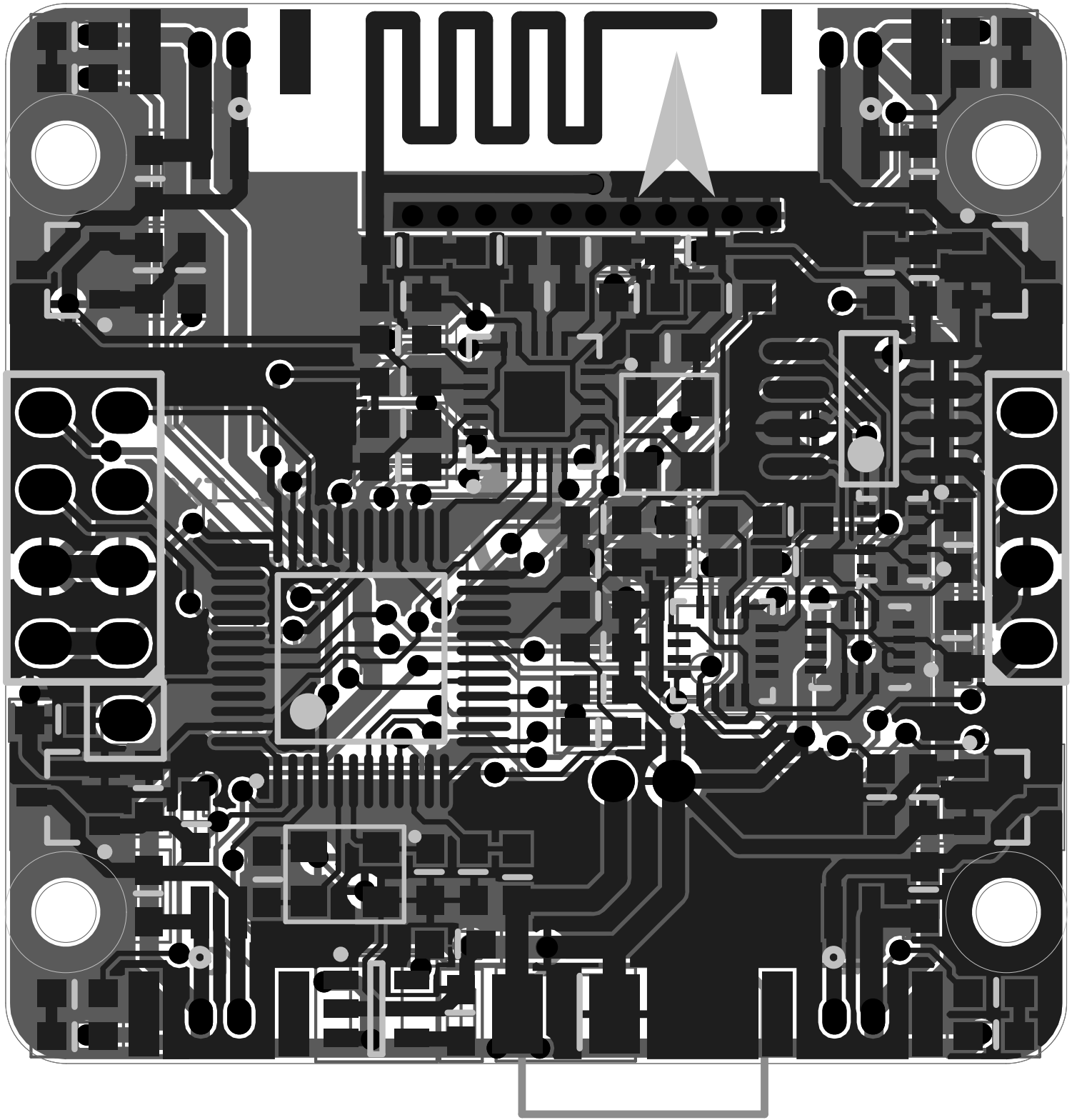

Board Stack Report